Thermo-Flo™

Remote Flow Controller

FLOWLINE™
LEVEL BEST

LC82 Series Manual

The general-purpose flow controller is offered in a single configuration for low-flow pump and process protection. The LC82 Series accepts two flow sensor inputs and provides two 10A relays for dual low flow control. Package this flow controller with our liquid or gas flow switch sensors. For field mount installation, add a single or dual controller NEMA box.

FEATURES

- Fail-Safe relay control of pumps, valves or alarms with a 0 to 60 second delay.
- Easy setup with LED indicators for sensor(s), power and relay status.
- 35mm DIN rail mount polypropylene enclosure with removable terminal strips.
- Invert switch changes relay state from NO to NC without rewiring.
- AC powered

TABLE OF CONTENTS

SPECIFICATIONS:

Supply voltage:	120 / 240 VAC, 50 - 60 Hz.
Consumption:	5 Watts max.
Sensor inputs:	(2) flow switches
Sensor supply:	24 VDC @ 100 mA
LED indication:	Sensor, power & relay status
Contact type:	(2) SPDT Relays
Contact rating:	250 VAC @ 10A
Contact output:	Selectable NO or NC
Contact delay:	0 to 60 seconds
Electronics temp.:	F: -40°to 158°
	C: -40°to 70°
Enclosure rating:	35mm DIN (EN 50 022)
Enclosure material:	PP (U.L. 94 VO)
Fail safety:	Power fail-safe
Classification:	General purpose
Approvals:	CSA, LR 79326-3

DIMENSIONS:

Top View - All Models

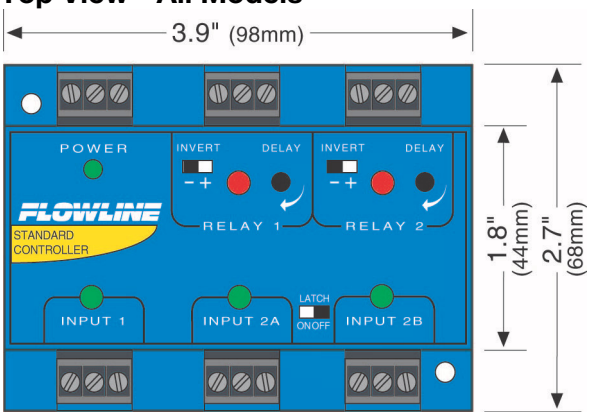

Side View - All Models

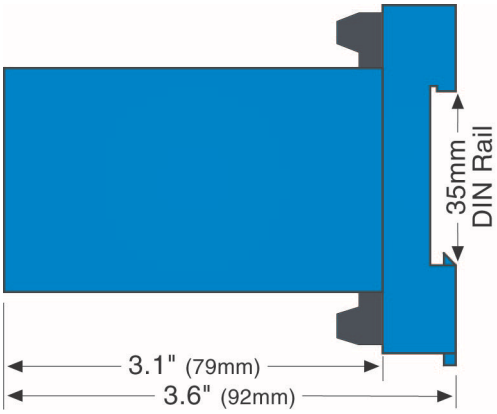

CONTROLLER LABELS:

LC82 series faceplate: 2 sensor input, 2 relay outputs. One relay for each sensor input.

The LC82 Series can also be used as a level controller with 3 sensor inputs and 2 relay outputs. One relay is latching, and the other is a single input relay.

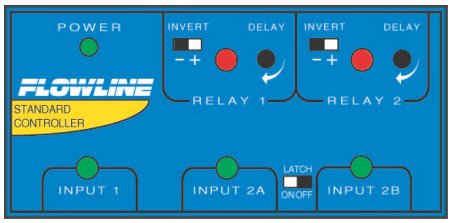

INTERNAL CONTROLLER LOGIC:

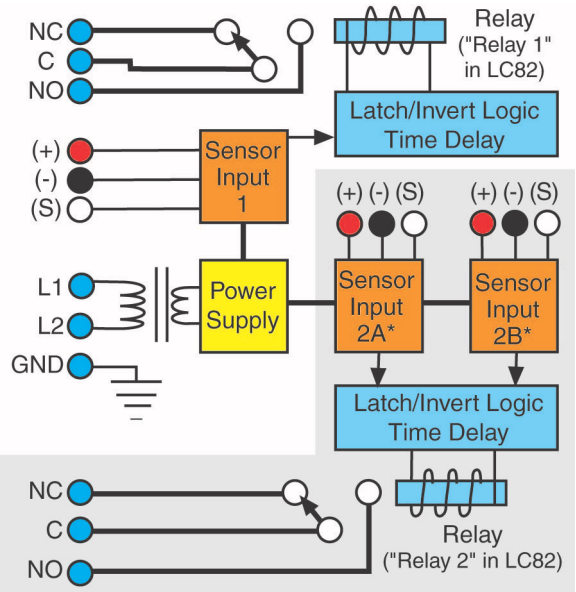

About This Manual: PLEASE READ THE ENTIRE MANUAL PRIOR TO INSTALLING OR USING THIS PRODUCT. This manual includes information on Remote Relay Flow Controllers from FLOWLINE: LC82 series. Many aspects of installation and use are similar. Where they differ, the manual will note it. Please refer to the part number on the controller you have purchased as you read.

User's Responsibility for Safety: FLOWLINE manufactures several models of controller, with different mounting and switching configurations. It is the user's responsibility to select a controller model that is appropriate for the application, install it properly, perform tests of the installed system, and maintain all components.

Electrical Shock Hazard: It is possible to contact components on the controller that carry high voltage, causing serious injury or death. All power to the controller and the relay circuit(s) it controls should be turned OFF prior to working on the controller. If it is necessary to make adjustments during powered operation, use extreme caution and use only insulated tools. Adjusting powered controllers is not recommended. Wiring should be performed by qualified personnel in accordance with all applicable national, state and local electrical codes.

Flammable or Explosive Applications*: The entire LC82 series remote mount controllers should not be used with explosive or flammable liquids, which require an intrinsically safe or explosion proof rating.* If you are unsure of the suitability of a controller for your installation, consult your Flowline representative for further information.

Install In a Dry Location: The controller housing is not designed to be immersed. When installed properly, it should be mounted in such a way that it does not normally come into contact with liquid. Refer to an industry reference to ensure that compounds that may splash onto the controller housing will not damage it. Such damage is not covered by the warranty.

Relay Contact Rating: The relay is rated for a 10 amp resistive load. Many loads (such as a motor during start-up or incandescent lights) are reactive and may have an inrush current characteristic that may be 10 to 20 times their steady-state load rating. The use of a contact protection circuit may be necessary for your installation if the 10 amp rating does not provide an ample margin for such inrush currents.

Make a Fail-Safe System: Design a fail-safe system that accommodates the possibility of relay or power failure. If power is cut off to the controller, it will de-energize the relay. Make sure that the de-energized state of the relay is the safe state in your process. For example, if controller power is lost, a pump filling a tank will turn off if it is connected to the Normally Open side of the relay.

While the internal relay is reliable, over the course of time relay failure is possible in two modes: under a heavy load the contacts may be "welded" or stuck into the energized position, or corrosion may buildup on a contact so that it will not complete the circuit when it should. In critical applications, redundant backup systems and alarms must be used in addition to the primary system. Such backup systems should use different sensor technologies where possible.

While this manual offers some examples and suggestions to help explain the operation of FLOWLINE products, such examples are for information only and are not intended as a complete guide to installing any specific system.

COMPONENTS:

Part Number	Power	Inputs	Alarm Relay	Latching Relay	Function
LC82-1001	120 VAC	2	1	1	**Alarm (Relay 1)** - High Flow, Low or Pump Protection **Latching (Relay 2)** - High Flow, Low or Pump Protection
LC82-1001-E	240 VAC				

- Owner's Manual

240 VAC OPTION:

When ordering any 240 VAC version of the LC82 series, the controller will arrive configured for 240 VAC operation. 240 VAC versions will include a –E to the part number (i.e., LC82-1001-E).

GUIDE TO CONTROLS:

Below is a listing and the location of the different components for the controller:

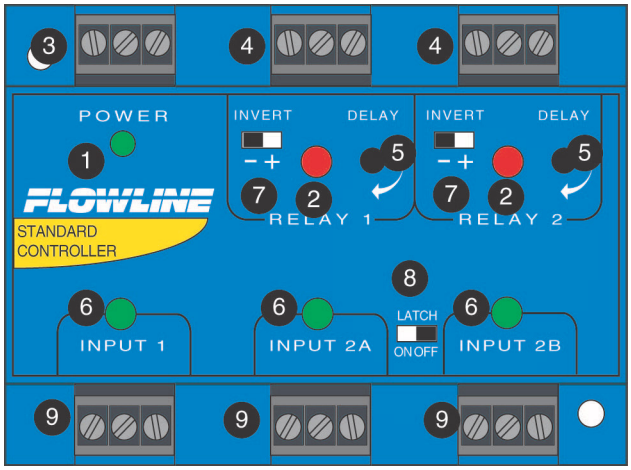

1. **Power indicator:** This green LED lights when AC power is ON.
2. **Relay indicator:** This red LED will light whenever the controller energizes the relay, in response to the proper condition at the sensor input(s) and after the time delay.
3. **AC Power terminals:** Connection of 120 VAC power to the controller. The setting may be changed to 240 VAC if desired. This requires changing internal jumpers; this is covered in the Installation section of the manual. Polarity (neutral and hot) does not matter.
4. **Relay terminals (NC, C, NO):** Connect the device you wish to control (pump, alarm etc.) to these terminals: supply to the COM terminal, and the device to the NO or NC terminal as required. The switched device should be a non-inductive load of not more than 10 amps; for reactive loads the current must be derated or protection circuits used. When the red LED is ON and the relay is in the energized state, the NO terminal will be closed and the NC terminal will be open.
5. **Time delay:** Use potentiometer to set delay from 0.15 to 60 seconds. Delay occurs during switch make and switch break.
6. **Input indicators:** Use these LEDs for indicating Flow or No-Flow status of switch. When switch is Closed, LED will be Amber. When switch is Open, LED will either be OFF. ***Note:*** *Consult the manual for the flow switch to determine exact wiring as well as switch polarity (Open or Closed during Flow).*
7. **Invert switch:** This switch reverses the logic of the relay control in response to the switch(es): conditions that used to energize the relay will now de-energize the relay and vice versa.
8. **Latch switch:** This switch determines how the relay will be energized in response to either one input (Input 2A) or two inputs (Inputs 2A and 2B). When LATCH is OFF, the relay responds to sensor Input 2A only; when LATCH is ON, the relay will energize or de-energize only when both switches (2A and 2B) are in the same state (both open or both closed). ***Note:*** *In a majority of flow / no-flow applications, the latch will be turned OFF.*
9. **Input terminals:** Connect the switch wires to these terminals: ***Note the polarity:*** *(+) is a 24 VDC, 100 mA power supply, (-) is the return path from the sensor and (S) is a powered switch input (14 VDC, 25mA). Consult the Flow Switch Manual for switch polarity (*Ex: Open or Closed for Flow) as well as wiring information.

CONNECTING FLOW SWITCHES TO INPUT TERMINALS:

There are two types of flow switch outputs from Flowline that are compatible with the LC82 series of controller. The typical/most common flow switches have a relay output (models FT10 - _ _ _ 5 and GT10 - _ _ _ 5) with 4 wires as the output (Red, Black, Green and White). Not as common, Flow Switches with FET outputs (N-Channel only, models FT10 - _ _ _ 2 and GT10 - _ _ _ 2) with three wires (Red, Black and White) can also be wired to the flow controller. See the illustration below to indicate wiring for your switch and the polarity of the switch output.

Note: The Shield wire will be used only for long cable runs or where excessive electrical noise is present.

Standard Relay Output Flow Switches

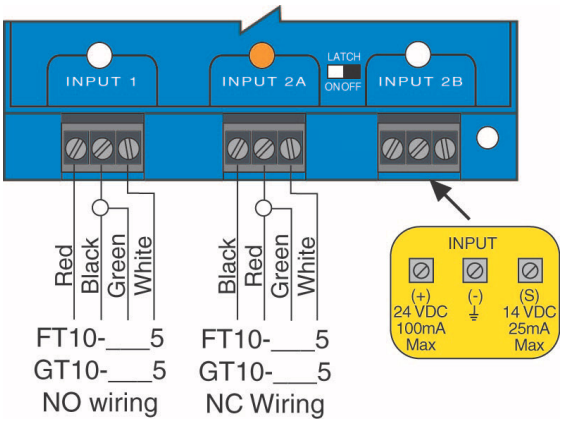

FET Switch (N-Channel*) Flow Switches

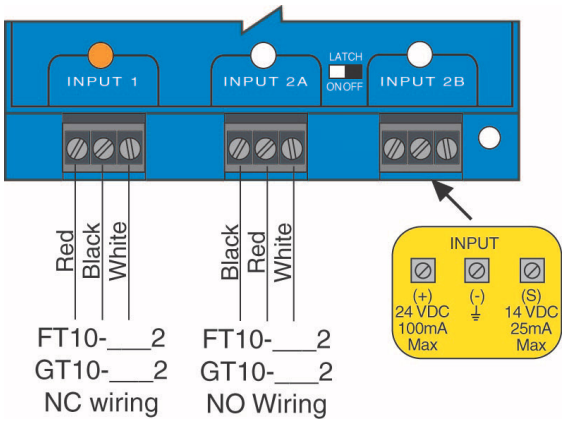

* P-Channel FET switches cannot be used with Flow Controller

LED INDICATION:

Use LEDs located above the input terminals to indicate whether the switch is in a Flow or No-Flow state. With the flow switch wired NC, the Amber LED indicates No-Flow, and no LED indicates flow. Wiring the switch, NO (reversing the Red and Black wires), the Amber LED indicates Flow, and no LED indicates No-Flow.

NC Wiring Amber LED

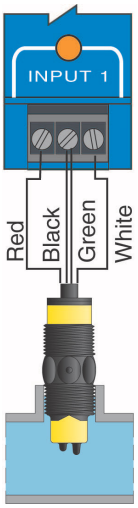

NC Wiring LED OFF

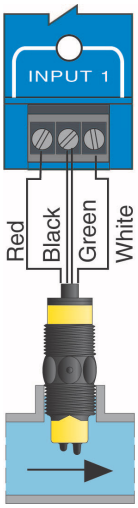

NO Wiring Amber LED

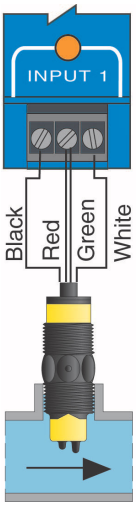

NO Wiring LED OFF

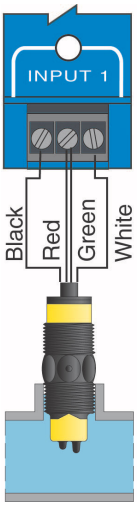

RELAY AND POWER TERMINALS

Depending on the model selected, there will be either one or two relays. The label for the relay applies for both relays. Each terminal has a Normally Open (NC), Common (C) and Normally Open (NO) terminal. The relay(s) is(are) a single pole, double throw (SPDT) type rated at 250 Volts AC, 10 Amps, 1/4 Hp.

Note: The relay contacts are true dry contacts. There is no voltage sourced within the relay contacts.

Note: The "normal" state is when the relay coil is de-energized and the Red relay LED is Off / de-energized.

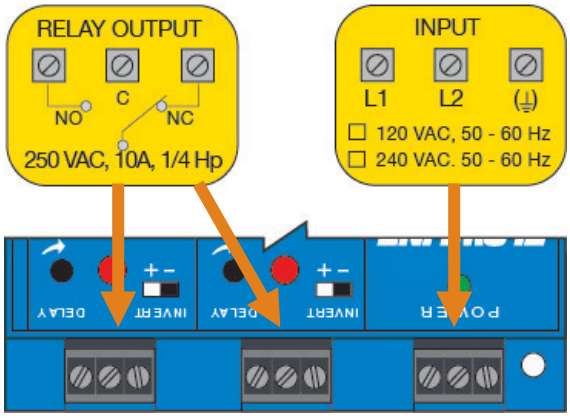

VAC POWER INPUT WIRING:

The Power Terminal is located next to the Relay(s). Observe the Power Supply label, which identifies the power requirement (120 or 240 VAC) and the terminal wiring.

Note: Polarity does not matter with the AC input terminal.

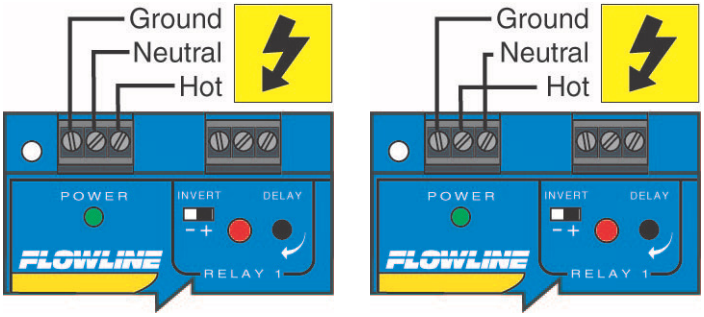

CHANGING FROM 120 TO 240 VAC:

1. Remove the back panel of the controller and gently slide the printed circuit board from the housing. Use caution when removing the PCB.
2. Located jumpers JWA, JWB and JWC on the PCB.
3. To change to 240 VAC, remove jumpers from JWB and JWC and place a single jumper across JWA. To change to 120 VAC, remove jumper JWA and place jumpers across JWB and JWC.
4. Gently return PCB into housing and replace back panel.

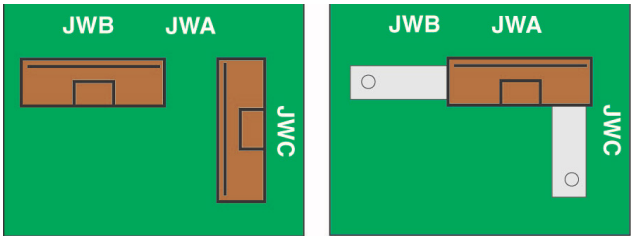

120 VAC Configuration **240 VAC Configuration**

240 VAC OPTION:

When ordering any 240 VAC version of the LC82 series, the sensor will arrive configured for 240 VAC operation. 240 VAC versions will include a –E to the part number (i.e., LC82-1001-E).

PANEL DIN RAIL MOUNTING:

The controller may be mounted by either a back panel using two screws through mounting holes located at the corners of the controller or by snapping the controller on 35 mm DIN Rail.

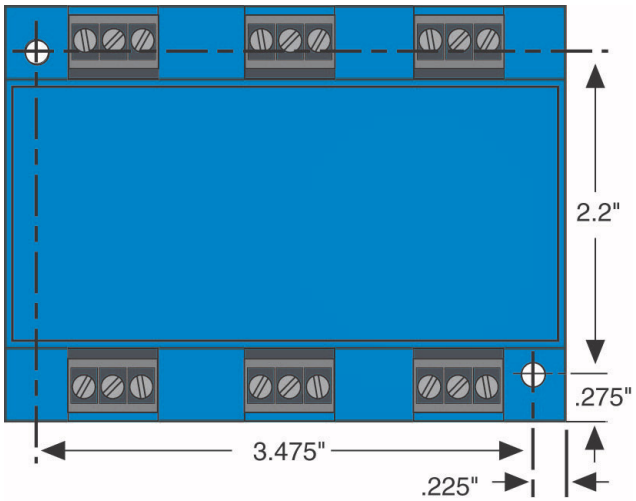

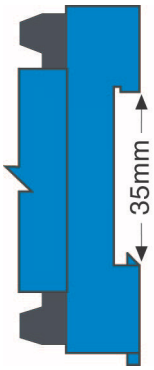

Note: *Always install the controller in a location where it does not come into contact with liquid.*

LOW FLOW ALARM:

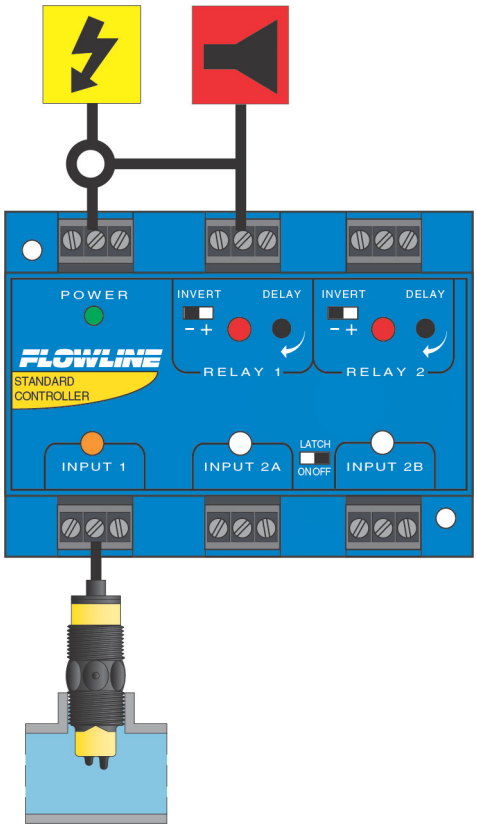

The goal is to indicate when the flow rate falls below a certain point. If it does, an alarm is supposed to sound, alerting the operator of a low flow condition. The flow switch is wired to Input 1 and the alarm is wired through Relay 1.

If power is accidentally cut to the controller, the sensor's ability to notify the operator of a low flow condition could be lost. The system must alert the operator not only to low flow, but to controller power loss. To do this, connect the hot lead of the alarm to the NC side of the relay terminal of the controller. If power is lost, the relay will be de-energized, and the alarm will sound (if there is still power to the alarm circuit itself). The alarm circuit should have a non-interruptible power supply or some other indicator or backup alarm to warn of a power failure in the alarm circuit.

In this application, the normal status is when the sensor is in the flow condition, and the relay will be energized holding the alarm circuit Open.

- If the switch is wired NC, the input LED will be OFF and the relay LED will be ON. So, for this wiring configuration, Invert should be set to the ON position.
- If the switch is wired NO, the input LED and the relay LED will be ON simultaneously. So, for this wiring configuration, Invert should be set to the OFF (-) position.

DUAL FLOW ALARM:

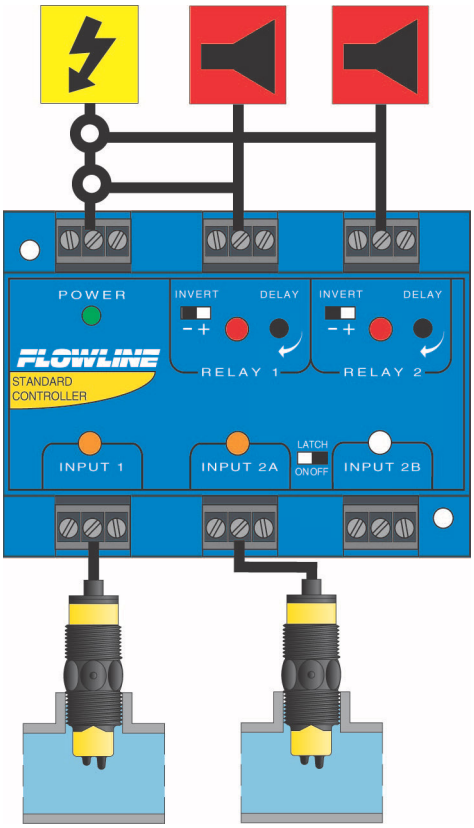

The goal is to indicate when the flow rate falls below a certain point on two different lines. If it does, an alarm is supposed to sound, alerting the operator of a low flow condition for the specific line. For Line #1, the flow switch is wired to Input 1 and the alarm is wired through Relay 1. For Line #2, the flow switch is wired to Input 2A and the alarm is wired through Relay 2.

Accidental power cut to the controller must be considered as in the Low Flow Alarm example seen above. Follow the same logic for Low Flow Alarm as with Dual Flow Alarm.

In this application, the normal status is when the sensor is in the flow condition, and the relay will be energized holding the alarm circuit Open.

- If the switches are wired NC, the input LED will be OFF and the relay LED will be ON. So, for this wiring configuration, Invert should be set to the ON position.

- If the switches are wired NO, the input LED and the relay LED will be ON simultaneously. So, for this wiring configuration, Invert should be set to the OFF (-) position.

SET POINTS:

If the preset factory calibration is not adequate for your application, follow the calibration steps listed below. Note: the switch's internal LED will be on when the switch detects no-flow and will off when the switch detects flow.

1. Install the fitting and flow switch as described in the Installation section of this manual. Turn the flow switch and controller power on and adjust the flow rate to the application setting. If the medium to be sensed is likely to be subject to high temperature variations, the flow switch should be set at the highest normal temperature likely to be encountered.
2. Locate the potentiometer knob at the top of the flow switch. The red LED is visible through the potentiometer. (If the LED is on, slowly adjust the potentiometer counterclockwise, with a small flat head screwdriver until the LED turns off.) The adjustment is a single turn 270° potentiometer. The initial response time of the flow switch after adjustment is 1 to 10 seconds. Adjust the potentiometer in slow increments and wait for the response. If the LED is off, slowly adjust the potentiometer clockwise until the light turns on. Then turn the potentiometer counterclockwise to bring the LED off at a reliable setting. Remember, adjust the potentiometer in slow increments and wait for the response.
3. Verify that the new calibration is correct by lowering the system flow rate below the set point and check to see that the red LED turns on. Then increase the flow rate above the set point and verify that the red LED turns off accordingly.

Liquid Switch
FT10 - _ _ _ 5 or
FT10 - _ _ _ 2 Series

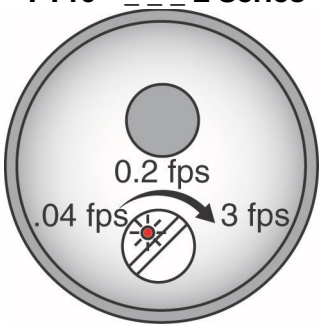

Gas Switch
GT10 - _ _ _ 5 or
GT10 - _ _ _ 2 Series

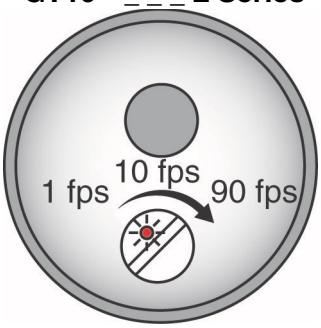

RELAY LATCH LOGIC (RELAY 2 ONLY)

This relay is primarily a flow/no-flow relay. However, when used as a level relay, it can either be an independent relay (high- or low-level alarm) or a latching relay (automatic fill or empty) with latch ON. With Latch OFF, the relay will only respond to the Input 2A. Input 2B will be ignored. This configuration is ideal for alarming, such as flow, no-flow, leak detection, high level or low level.

When the Latch switch is ON, Relay 2 requires that both Inputs 2A and 2B to be in the same state before the relay will switch.

In an auto fill application, when the bottom switch is dry (top switch is also dry) the relay will energize. The relay will remain in an energized state until the top switch becomes wet (bottom switch is also wet). At this point, the relay will de-energize and remain de-energized until the bottom switch becomes dry again.

The same logic applies for auto empty applications. The only change is that the relay will energize when the top is wet (bottom is also wet) and de-energize when the bottom is dry (top is also dry).

In both scenarios, when the level is between the two sensors, the relay will not change state, regardless of is the liquid is rising or falling. This logic is ideal for the controlling of liquid between to unique/different set points. The differential is controlled by the location of the two sensors.

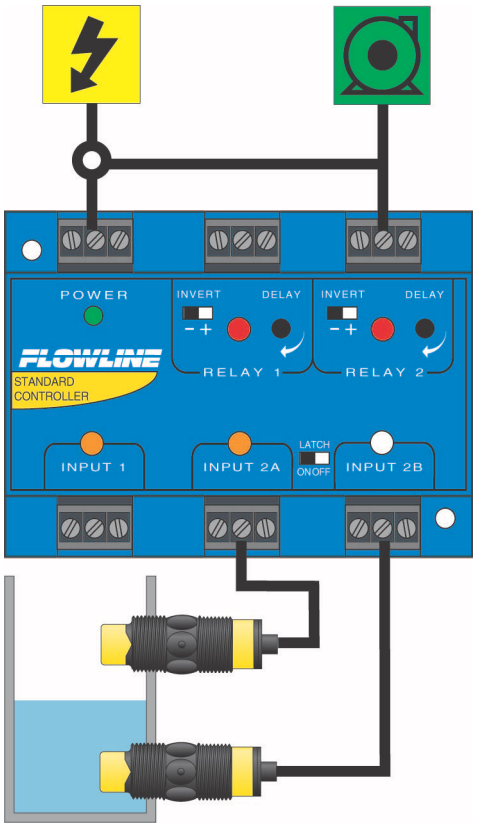

LATCH - ON VS OFF:

The relay can either be an independent relay (high level, low level or pump protection) with Latch OFF or can be a latching relay (automatic fill or empty) with Latch ON.

With Latch OFF, the relay will only respond to INPUT A. INPUT B will be ignored while Latch is OFF.

Invert OFF		Latch OFF
Input A*	Input B*	Relay
ON	No Effect	ON
OFF	No Effect	OFF

Invert ON		Latch OFF
Input A*	Input B*	Relay
ON	No Effect	OFF
OFF	No Effect	ON

With Latch ON, the relay will actuate when INPUT A and INPUT B are in the same condition. The relay will not change its condition until both inputs reverse their state.

Invert OFF		Latch ON
Input A*	Input B*	Relay
ON	ON	ON
OFF	ON	No Change
ON	OFF	No Change
OFF	OFF	ON

Invert ON		Latch ON
Input A*	Input B*	Relay
ON	ON	OFF
OFF	ON	No Change
ON	OFF	No Change
OFF	OFF	ON

Note: Some sensors (particularly buoyancy sensors) may have their own inverting capability (wired NO or NC). This will change the logic of the invert switch. Check your system design.

CONTROLLER LOGIC:

Please use the following guide to understand the operation of the controllers.

1. **Power LED:** Make sure the Green power LED is ON when power is supplied to the controller.
2. **Input LED(s):** The input LED(s) on the controller will be Amber when the switch(es) is/are wet and Green or OFF when the switch(es) is/are dry. If the LEDs are not switching the input LED, test the level switch.
3. **Alarm Relay (1 input):** When the input LED turn OFF and ON, the relay LED will also switch. With invert OFF, the relay LED will be ON when the input LED is ON and OFF when the input LED is OFF. With invert ON, the relay LED will be OFF when the input LED is ON and ON when the input LED is OFF.
4. **Latching Relay (2 inputs):** When both inputs are wet (Amber LED's ON), the relay will be energized (Red LED ON). After that, if one switch becomes dry, the relay will remain energized. Only when both switches are dry (both amber LED's OFF) will the controller de-energize the relay. The relay will not energize again until both switches are wet. See the Relay Latch Logic Chart below for further explanation.

TIME DELAY:

The time delay can be adjusted from 0.15 seconds to 60 seconds. The delay applies to both the Make and Break side of the relay. The delay can be used to prevent relay chatter, especially when you have a liquid level that is turbulent. Typically, a slight rotation clockwise, from a position of all the way counterclockwise, is enough to prevent relay chatter.

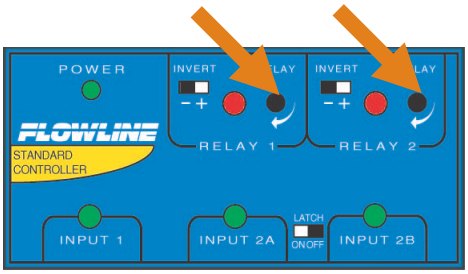

Note: The delay has stops on each end of its 270° rotation.

TROUBLESHOOTING:

PROBLEM	SOLUTION
Controller is powered, but nothing happens.	First check the Power LED to make sure it is Green. If not, check the wiring, power and make sure the terminal is seated correctly over the 3-pins.
A Flow or No-Flow condition is met but the relay did not switch.	Check the relay by switching the invert switch. Confirm that relay click on and off as well as the relay LED.
The Flow or No-Flow is not switching at the correct flow rate.	The flow switch may need to be adjusted. Review the Flow Switch Calibration section on the previous page for instructions on setting the actual flow switch.
Trying to start the flow but the controller keeps turning the flow off.	To restart a flow condition, the sensor needs to sense an actual flow condition before changing the relay in the controller. A flow switch over-ride may need to be added across the relay contacts that allows for a true flow to occur before switching back to the controller. The use of a moment switch is recommended for the over-ride switch.
Relay LED does not match my flow condition.	The relay LED can be switched by either the reversing the wiring of the sensor to the controller or by flipping the invert switch. This means that the relay LED can either be set to turn on during a flow condition or to turn off during a no-flow condition. This is all dependent on the wiring and the invert position.
Relay LED does not match the sensor's LED indicator.	The sensor's LED will always be ON during a No-Flow state and OFF during a Flow state, regardless of the switches wiring. As per above the input LED can be inverted to any condition. In some applications, they will match and in others they will be opposite. This is all dependent on the application parameter/setup.

TESTING RELAYS:

Normally Open (NO) Wiring:

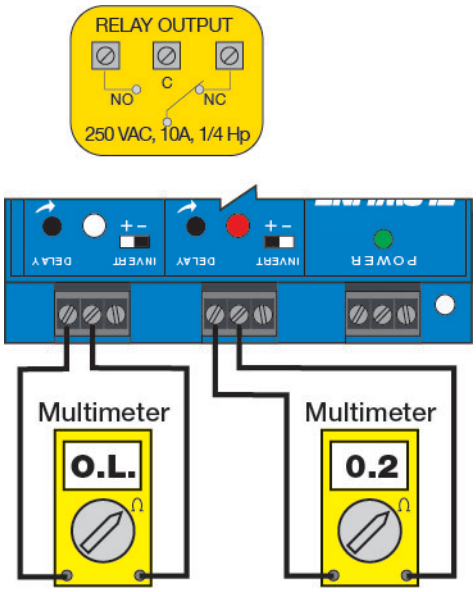

The relay contacts are true dry contacts with no voltage sourced within the relay contacts. To test, connect a Multimeter set to read Ohms.

Normally Open Wiring

- With Invert Off, circuit will be Open.
- With Invert ON, circuit will read a small resistance.

Normally Closed Wiring

- With Invert Off, circuit will be read a small resistance.
- With Invert ON, circuit will be open.

Normally Closed (NC) Wiring:

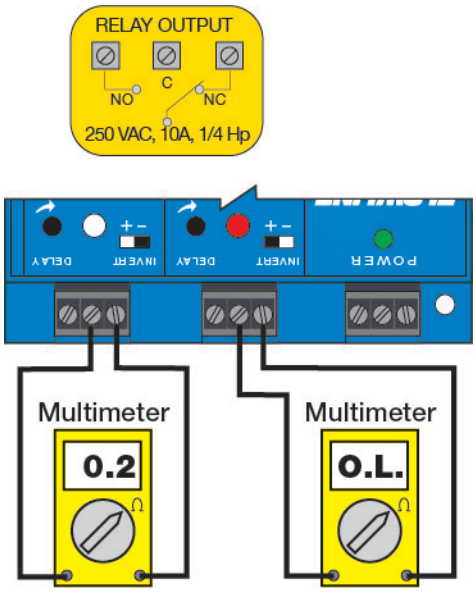

WARRANTY

Flowline warrants to the original purchaser of its products that such products will be free from defects in material and workmanship under normal use and service in accordance with instructions furnished by Flowline for a period of two years from the date of manufacture of such products. Flowline's obligation under this warranty is solely and exclusively limited to the repair or replacement, at Flowline's option, of the products or components, which Flowline's examination determines to its satisfaction to be defective in material or workmanship within the warranty period. Flowline must be notified pursuant to the instructions below of any claim under this warranty within thirty (30) days of any claimed lack of conformity of the product. Any product repaired under this warranty will be warranted only for the remainder of the original warranty period. Any product provided as a replacement under this warranty will be warranted for the full two years from the date of manufacture.

RETURNS

Products cannot be returned to Flowline without Flowline's prior authorization. To return a product that is thought to be defective, go to www.flowline.com, and submit a customer return (MRA) request form and follow the instructions therein. All warranty and non-warranty product returns to Flowline must be shipped prepaid and insured. Flowline will not be responsible for any products lost or damaged in shipment.

LIMITATIONS

This warranty does not apply to products which: 1) are beyond the warranty period or are products for which the original purchaser does not follow the warranty procedures outlined above; 2) have been subjected to electrical, mechanical or chemical damage due to improper, accidental or negligent use; 3) have been modified or altered; 4) anyone other than service personnel authorized by Flowline have attempted to repair; 5) have been involved in accidents or natural disasters; or 6) are damaged during return shipment to Flowline. Flowline reserves the right to unilaterally waive this warranty and dispose of any product returned to Flowline where: 1) there is evidence of a potentially hazardous material present with the product; or 2) the product has remained unclaimed at Flowline for more than 30 days after Flowline has dutifully requested disposition. This warranty contains the sole express warranty made by Flowline in connection with its products. ALL IMPLIED WARRANTIES, INCLUDING WITHOUT LIMITATION, THE WARRANTIES OF MERCHANTABILITY AND FITNESS FOR A PARTICULAR PURPOSE, ARE EXPRESSLY DISCLAIMED. The remedies of repair or replacement as stated above are the exclusive remedies for the breach of this warranty. IN NO EVENT SHALL FLOWLINE BE LIABLE FOR ANY INCIDENTAL OR CONSEQUENTIAL DAMAGES OF ANY KIND INCLUDING PERSONAL OR REAL PROPERTY OR FOR INJURY TO ANY PERSON. THIS WARRANTY CONSTITUTES THE FINAL, COMPLETE AND EXCLUSIVE STATEMENT OF WARRANTY TERMS AND NO PERSON IS AUTHORIZED TO MAKE ANY OTHER WARRANTIES OR REPRESENTATIONS ON BEHALF OF FLOWLINE. This warranty will be interpreted pursuant to the laws of the State of California. If any portion of this warranty is held to be invalid or unenforceable for any reason, such finding will not invalidate any other provision of this warranty.

For complete product documentation, video training, and technical support, go to www.flowline.com.
For phone support, call 562-598-3015 from 8am to 5pm PST, Mon - Fri.
(Please make sure you have the Part and Serial number available.)